All what we talked about until now is combinational logic gates which form combinational logic circuits. However, the actual circuits in any design take the configuration shown below called “synchronous pipeline”. That is, it contains both combinational logic and sequential logic (latches or flip flops).

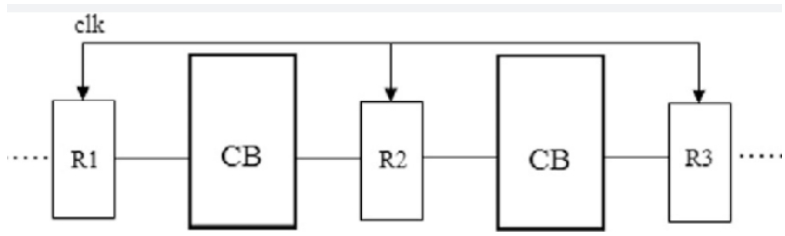

Synchronous: because all flip flops are triggered by the same clock.

Pipeline: because there are combinational blocks between these flip flops.

So, until now we have understood how the combinational blocks work, how to calculate their delay, and their power consumption. Now, we would like to understand the storage elements in pipelines; latches and flip flops.

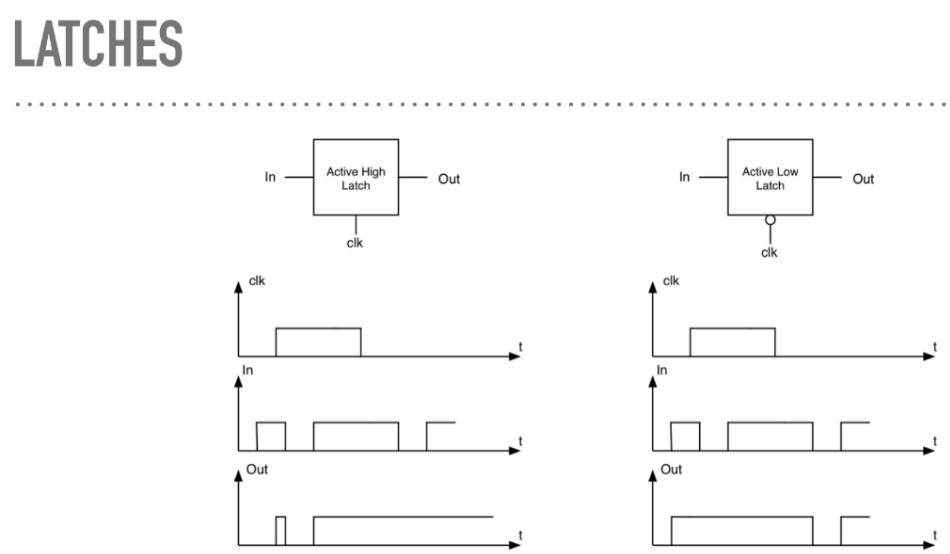

- Level sensitive
- Two flavors

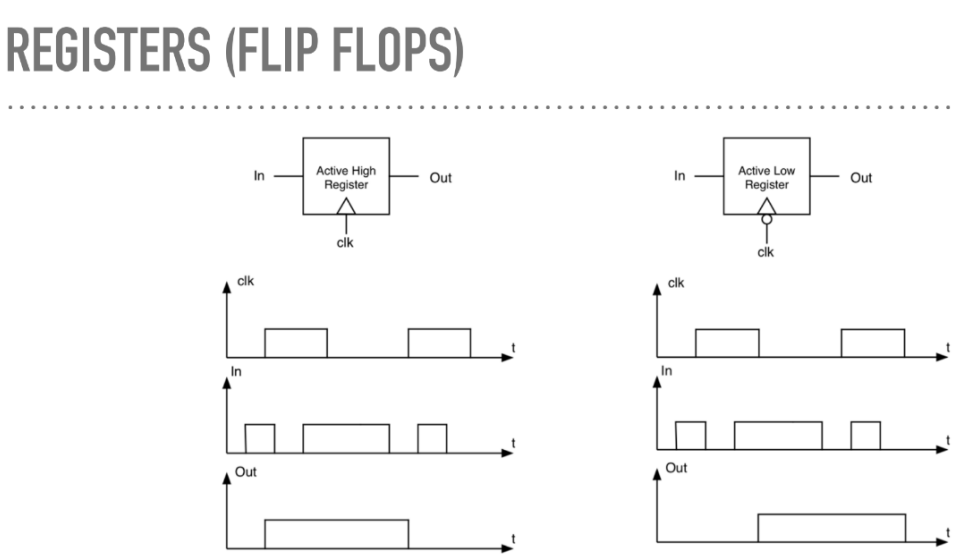

- Edge sensitive
- Two flavors

Latches

I. Static Latch

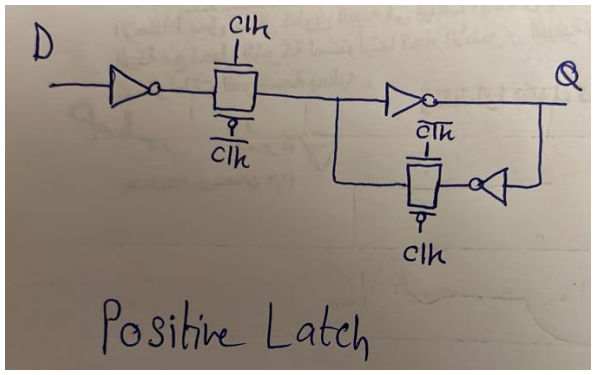

II. Dynamic Latch

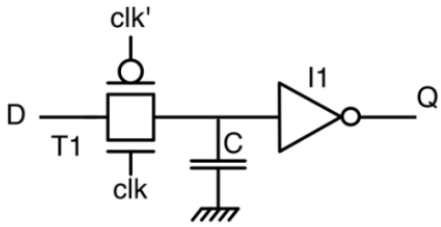

Flip Flops

simply, flip-flop is nothing but a negative latch + positive latch. That is:

positive flip-flop = negative latch + positive latch

as shown in the figure below.

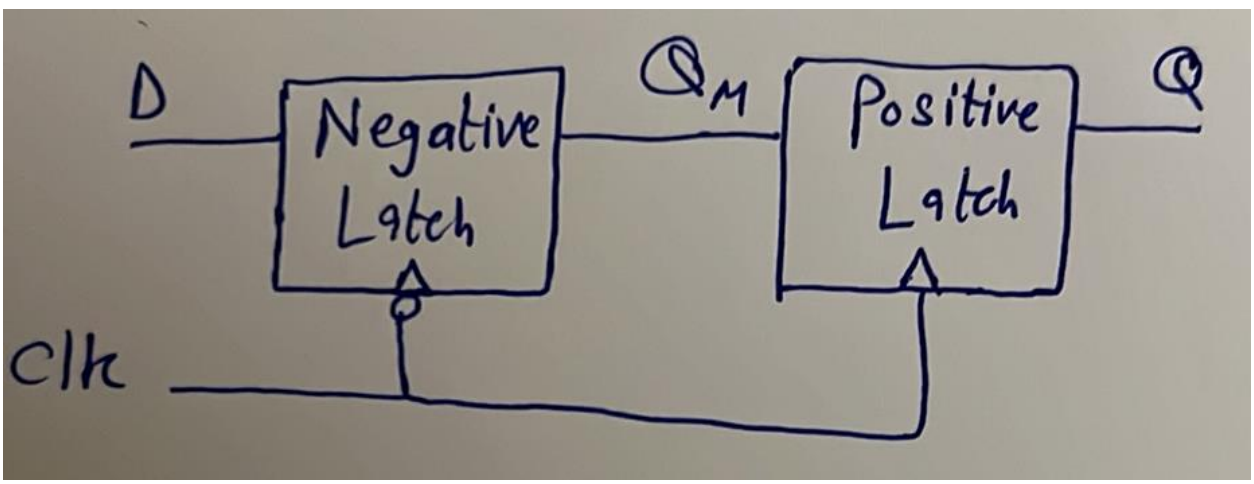

The first latch is called master, while the second one is called slave. El beye7sal en lama el clock teb2a be 0 el negative latch beyeshtaghal fa beya5od el value beta3t D yeshelha fel intermediate node QM. Ama yegy positive edge, el latch el tany yeshtaghal wel latch el awalany yetfy, fa el value el fi QM tetla3 3and el output Q. Fa el beye7sal fel flip flop en wel clock be zero el value bta3t el input bet get stored fel intermediate node, w lama yegy positive clock edge betetla3 el value de 3and el output.

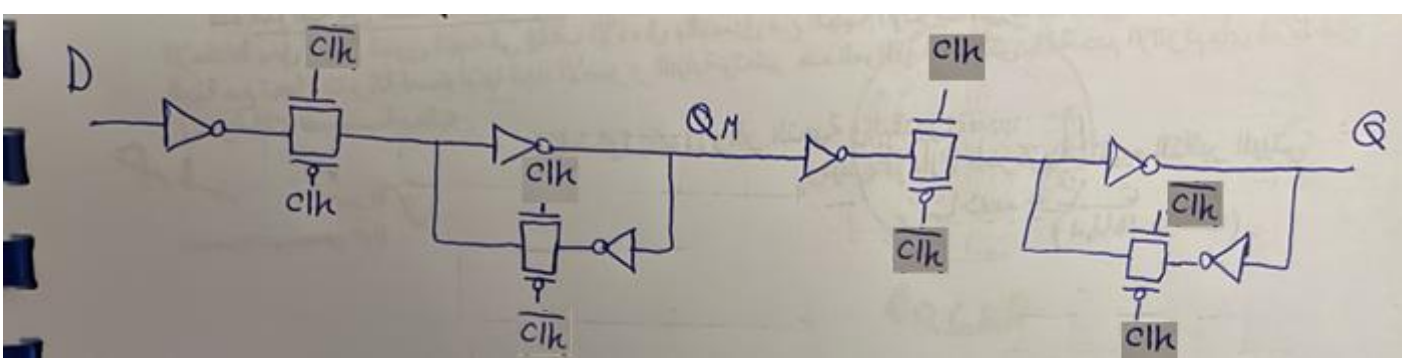

Delay in Flip Flops

1) Setup time (t_{su}): el wa2t el lazem a7afez 3al D input sabet fih abl el clock edge, lw ghayart el input 5elalo mesh hayet3emel latching lel input el gedeed da be shakl mazboot.
2) Hold time (t_h): el wa2t el lazem a7afez 3al D input sabet fih b3d el clock edge, lw ghayart el input 5elalo momken ye overwrite el data el fatet.
3) Clock-to-Q time (t_{cq}): el wa2t men awel ma el clock edge yegy l7d ma el output b2a gahez.

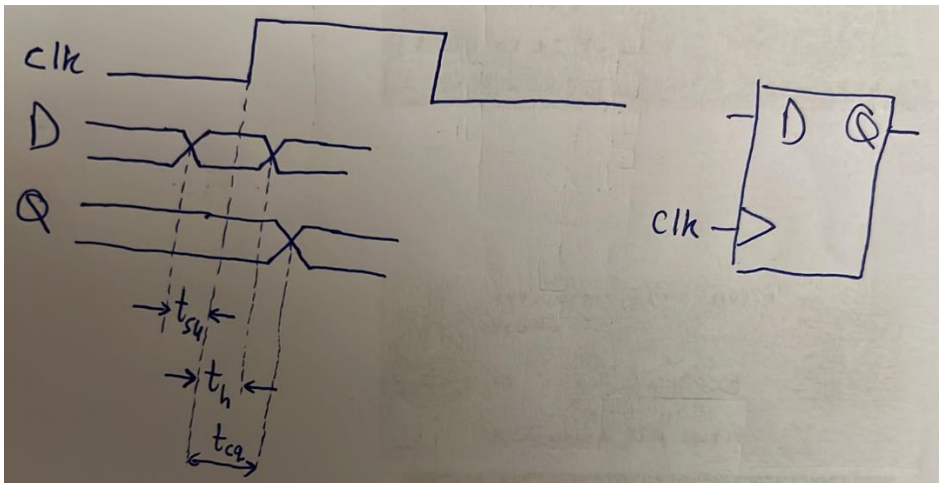

Back to the flip flop's circuit to understand these times:

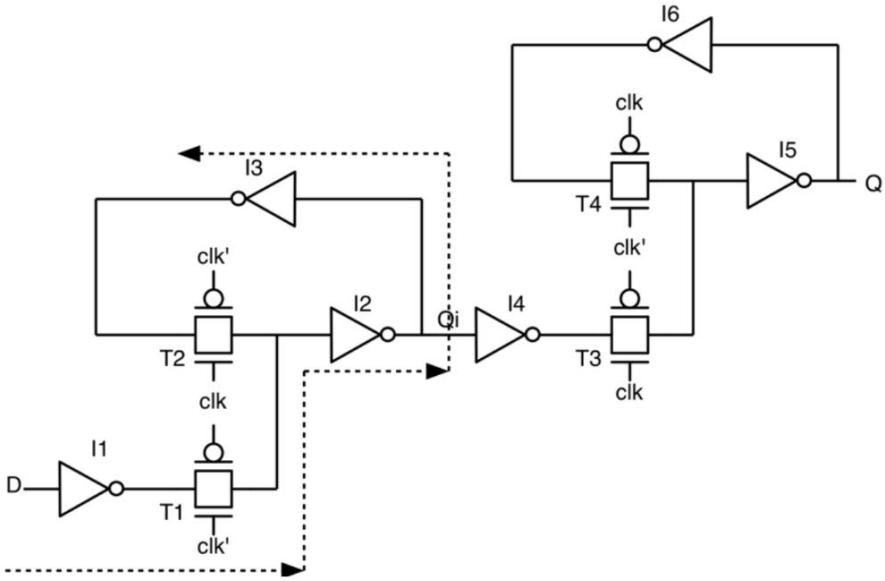

1. t_{su}

Nekteb el equations b3d keda nefham:

$$t_{su} = t_{I1} + t_{T1} + t_{I2} + t_{I3}$$

$$\tau_{I1} = R_{I1}(C_{d_{I1}} + C_{d_{T1}})$$

$$\tau_{T1} = R_{T1}(C_{d_{T1}} + C_{d_{T2}} + C_{g_{I2}})\ (we\ are\ assuming\ C_d = C_g)$$

$$\tau_{I2} = R_{I2}(C_{d_{I2}} + C_{g_{I4}} + C_{g_{I3}})$$

$$\tau_{I3} = R_{I3}(C_{d_{I3}} + C_{d_{T2}})$$

Leeh equation el setup keda?

E7na olna eh howa el setup time? El wa2t el abl el clock edge el lazem a7afez 3ala el data tkoon sabta fih w ela momken mayet3emelahash latching be tare2a mazbota. Tab hena ana eh el momken yeb2a me5awefny en maye7salahash latching be tare2a mazbota lama el clock tegy? La2en lama el clock tegy el transmission gate T_1 hatefta7, fa momken el change el ana lesa 3amlo da mayel7a2sh yed5ol gowa. 5alas yeb2a ana lazem aghayar el input abl el clock edge be w2t kefaya such that eno ye3ady men el

transmission gate T_1. Tab ma keda da ma3nah en t_{su} should be $t_{I1} + t_{T1}$ bs, leeh 5adna $t_{I2} + t_{I3}$ kaman m3ana? For now, 5aleek 7afezha bs enena lazem ne include el delay beta3 I_2 and I_3 fel setup time, w hanefham fi 4th year semester two leeh fi topic "Clock Domain Crossing".

2. t_{cq}

$$t_{cq} = t_{T3} + t_{I5}$$

Leeh ma5adnash t_{I4} m3ana, mesh el mafrood men awel Q_i l7d el output?

Answer: da la2enena abl ma el clock edge yegy estanena kaman el data te propagate fi I_3, fa 3o2bal ma 3amalet propagation fi I_3, kanet 3amalet propagation fi I_4 kaman, 7ata I_3 w I_4 shayfeen ta2reban nafs el loading fa el delay beta3hom ta2reban 2ad b3d.

Tab leeh ma5adnash t_{I6} zy ma 3amalna fel setup?

Answer: la2eny mesh mohtam aslan en el data tewsal 3ando, madam tel3et 3and el output 5alas howa da keda definition el t_{cq}.

3. t_h

$$t_h = t_{1-1\ overlap} - (t_{I1} + t_{T1})$$

Y3ny eh? el hold time howa el time el ana me7tag aseeb el input zy ma howa fih 3ashan lw ghayarto momken yed5ol yeghayar el latched value el abl keda. Fa hena ideally el transmission gate T_1 awel ma el clock edge yegy hateb2a open circuit, fa 5alas ghayar el input bra7tak keda keda mesh hayewsal gowa, fa apparently el hold time be zero. However, meen 2alak en awel ma el clock edge hayegy el transmission gate T_1 hateb2a open circuit 3la tool? Da mesh hy7sl. Tab leeh da mesh haye7sal? La2en T_1 3andaha NMOS da5el 3leeh clock bar, w PMOS da5el 3leeh el clock. Fa el clock bar da gy menen? Gy men inverter! W bel taly lw gena nersem el clock wel clock bar el da5leen 3al PMOS wel NMOS, hanla2ehom as shown below:

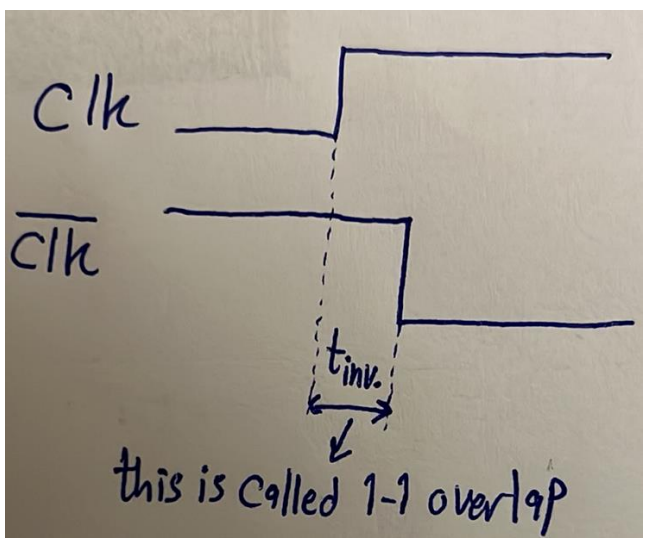

Fa during el 1-1 overlap period de, actually el transmission gate lesa on la2en el NMOS on! W bel taly lw 3amalt taghyeer within el period de hay get latched w hab2a keda 5esert el value el adema. Yeb2a keda el hold time el mafrood yeb2a $t_{1-1\ overlap}$. However, fih 5abar helw en lesa fih inverter fel awel + el time bta3 el gate T_1 nafso hay2a5aroly el input shwaya lama a3mel 3leeh taghyeer, fa da hay relax shwaya el requirement 3al hold time 3ashan yeb2a $t_{1-1\ overlap} - (t_{I1} + t_{T1})$. Actually, momken el hold time yeb2a even bel negative! Y3ny masmo7ly aghayar el input even abl ma el clock edge yegy w still ma3melsh hold violation! 5aly balak b2a en el hold violation 3la tool hayeb2a metastability! Da gheer el setup violation, momken a3mel setup violation w my7slsh metastability lw el gate T_1 kanet fata7et abl ma el change yewsalaha, laken el hold violation ma3nah en el NMOS kan shaghal w bel taly 5ad el change, w bel taly hate7sal el moshkela el olna 3leeha fel positive feedback loop.

Momken tefakar "tab maho el $t_{1-1\ overlap}$ de heya el delay beta3 inverter, w t_{I1} heya bardo delay beta3 inverter w kaman magmoo3 3leeha t_{T1}, fa akeed $t_{I1} + t_{T1}$ hayeb2a dayman akbar men $t_{1-1\ overlap}$ w bel

taly 3omr ma hayeb2a fih hold violation". Fel 7a2e2a en ah $t_{1-1\ overlap}$ w t_{I1} homa el etneen delays btoo3 inverters, bs el inverter el ma7tot fi skeet el clock shayef load akbar bekteer la2en el clk' de da5la 3la 4 transistors, fa shayfa gate capacitances akbar men beta3t I_1. Fa el mohem en momken gedan yeb2a $t_{1-1\ overlap}$ yeb2a akbar men $t_{I1} + t_{T1}$, w bel taly sa3et-ha el hold time hayeb2a bel positive. Sa3et-ha ne3mel eh? 5alas yeb2a lazem manghayarsh el input abl hold time men b3d el positive clock edge.

Tab lama yegy el negative edge mesh haye7sal moshkela? Actually, haye7sal moshkela shabeeha w heya el $t_{0-0\ overlap}$, en el clock wel clock bar hayeb2o el etneen be zero. Da haye3mel eh? hay5aly el transmission gates kolaha shaghala through el PMOS. Tab eh el moshkela el momken te7sal? Howa ana aslan b3d el negative edge el mafrood eh hadafy? Eny a latch el input 3and el internal node Q_i, b7ees lama yegy el positive edge to5rog el value el 3and Q_i de lel output. Yeb2a en el transmission gates kolaha teb2a shaghala da hay5aleny ab2a 5ayef en T_3 maye2felsh 3la tool w bel taly el value el kont 3ayez atala3ha 3al output el cycle el gaya tetla3 delwa2ty w te overwrite the current output. Fa keda eh el wa2t el lw ghayart el input ableh haye7sal moshkela besabab el $t_{0-0\ overlap}$? $t_{0-0\ overlap} - (t_{I1} + t_{T1} + t_{I2} + t_{I4} + t_{T3})$. Tab eh keda b2a fih hold condition 3and el negative edge kaman, mayenfa3sh aghayar el input abl time $t_{0-0\ overlap} - (t_{I1} + t_{T1} + t_{I2} + t_{I4} + t_{T3})$ men b3d el negative edge kaman? Da keda tahreeg. W bel taly eh el badeel? Enena lazem nedman en:

$$t_{0-0\ overlap} < t_{I1} + t_{T1} + t_{I2} + t_{I4} + t_{T3}$$

Tab3an da condition as-hal shwaya men el kan 3la $t_{1-1\ overlap}$.

Yeb2a el $t_{1-1\ overlap}$ el condition el 3leeh sa3b ne7a2a2o w bel taly mesh hanehtam enena ne7a2a2o, instead mesh hanghayar el input abl hold time b3d el positive clock edge w 5alas. Laken el $t_{0-0\ overlap}$ akeed mesh mesh hanghayar el input abl hold time b3d el negative clock edge kaman, fa instead lazem nedman enena ne satisfy el condtition beta3 $t_{0-0\ overlap}$.

Conclusion for static flip flop:

$$t_{su} = t_{I1} + t_{T1} + t_{I2} + t_{I3}$$

$$t_{cq} = t_{T3} + t_{I5}$$

$$t_h = t_{1-1\ overlap} - (t_{I1} + t_{T1})$$

$$t_{0-0\ overlap} < t_{I1} + t_{T1} + t_{I2} + t_{I4} + t_{T3}$$

Dynamic Flip Flop

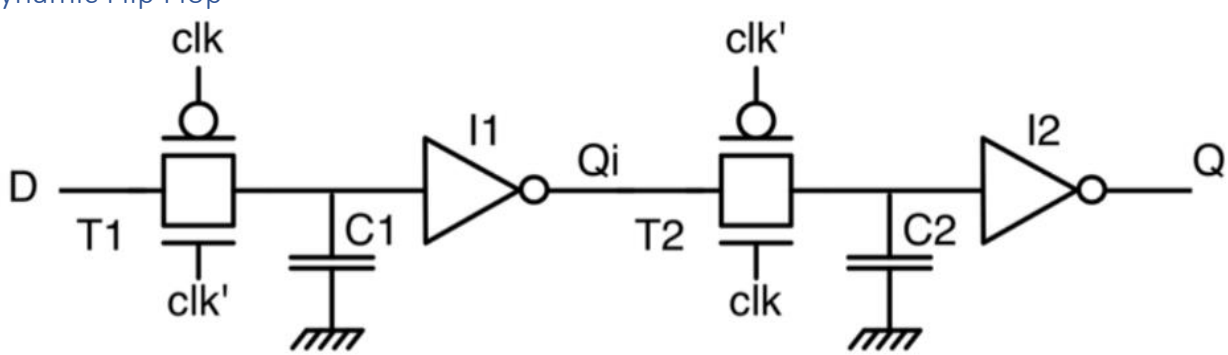

$$t_{su} = t_{T1}$$

$$t_{cq} = t_{I1} + t_{T2} + t_{I2}$$

$$t_h = t_{1-1\ overlap} - t_{T1}$$

$$t_{0-0\ overlap} < t_{T1} + t_{I1} + t_{T2}$$

Read the first 12 "slides".

Example:

Find the maximum clock frequency that a 5-bit adder can operate on.

Solution:

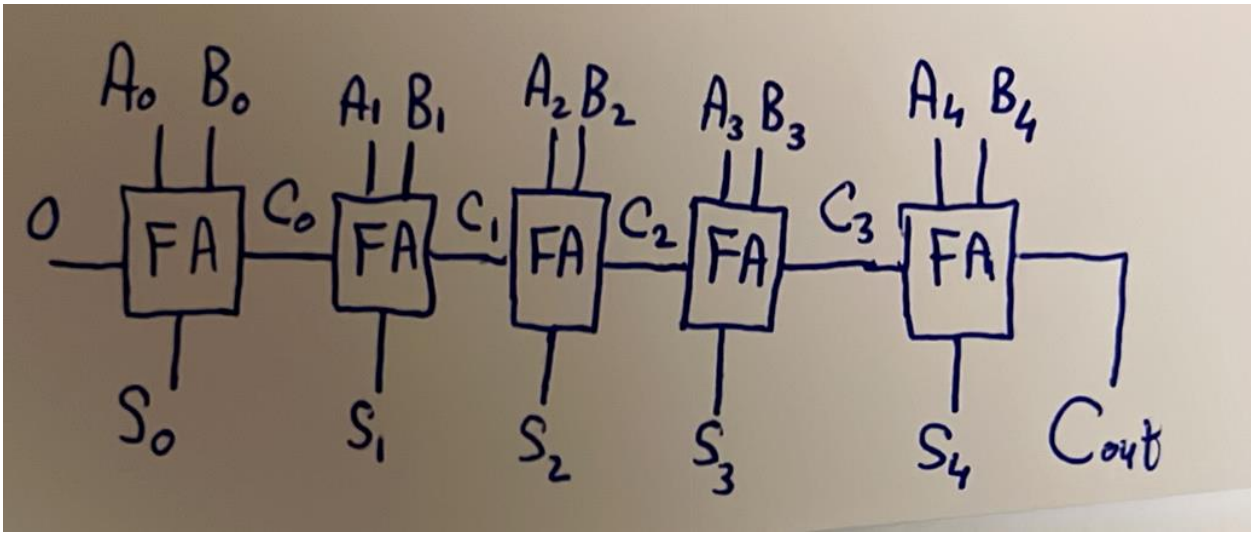

To determine the frequency, we need to draw the circuit on the transistor level to know the delays. Thus, we need to find expressions for the outputs of a full adder. For a full adder:

A, B, Cin	S	Cout
000’	0	0
001’	1	0
010’	1	0
011’	0	1
100’	1	0
101’	0	1
110’	0	1
111’	1	1

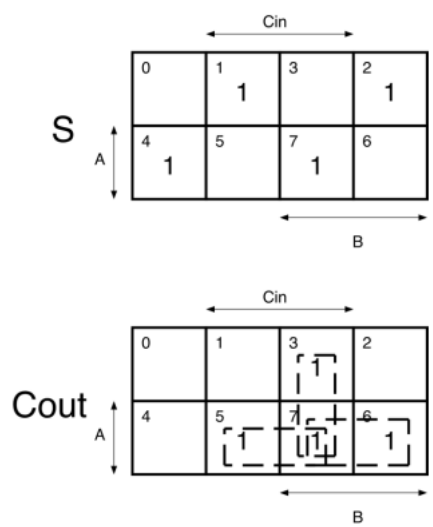

Thus:

$$S = A\hat{}B\hat{}C_{in} \quad = AB'C_{in}{}' + A'B'C_{in} + ABC_{in} + A'BC_{in}{}'$$

$$C_{out} = AC_{in} + AB + BC_{in}$$

We know that to implement S and C_{out}, we need to take common factors to simplify the expressions and hence minimize the number of transistors, but we will trivially use the expressions as they are:

$$S' = (A' + B + C_{in})(A + B + C_{in}')(A' + B' + C_{in}')(A + B' + C_{in})$$

$$C_{out}' = (A' + C_{in}')(A' + B')(B' + C_{in}')$$

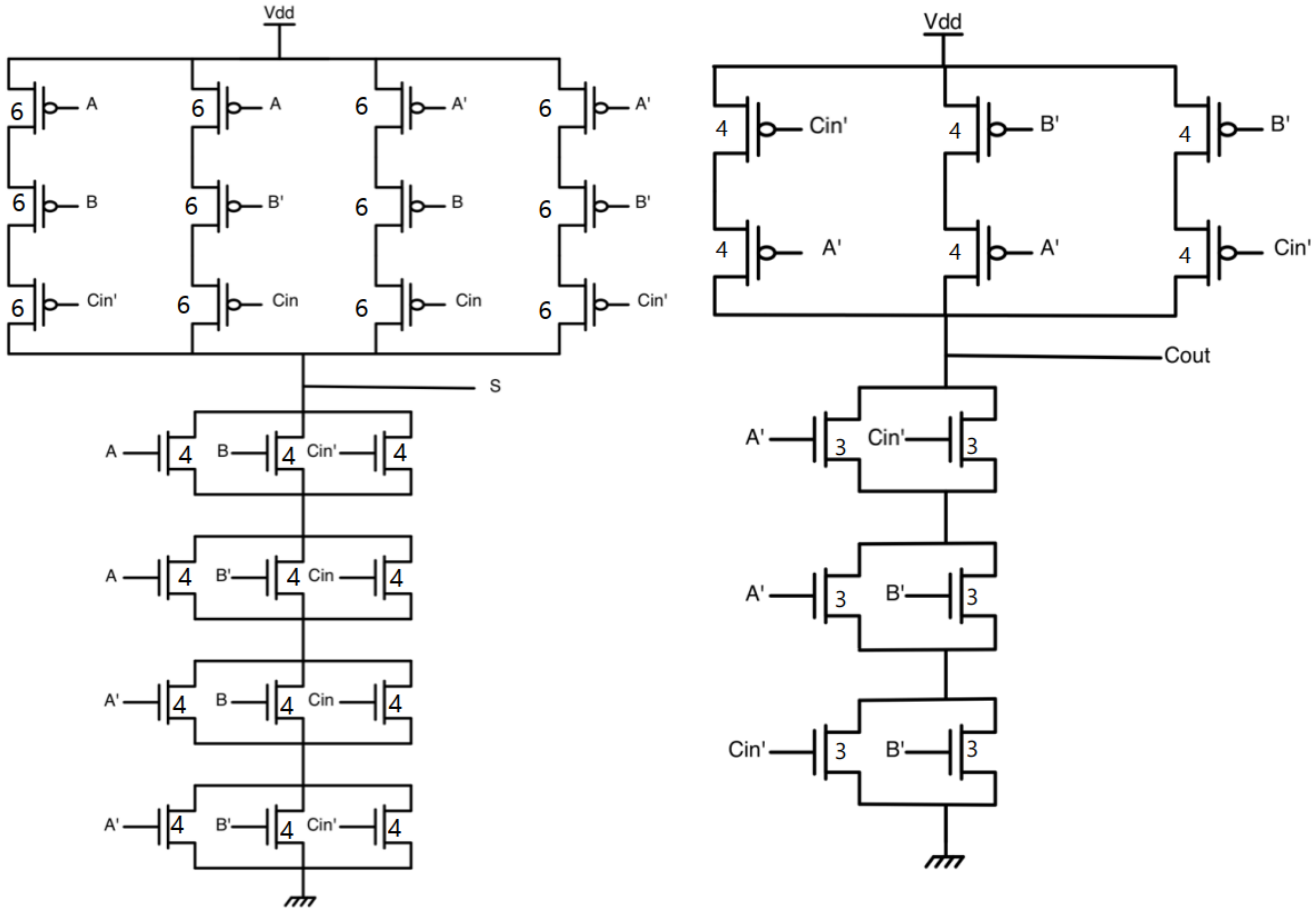

$$t_p|_S = 0.69 * 36R_oC_o$$

$$t_p|_{C_{out}} = 0.69 * 18R_oC_o$$

3ayzeen n3rf b2a el circuit de ne2dar neshaghalha 3la frequency 2ad eh. Ma3naha eh "ne2dar neshaghalha 3la frequency 2ad eh?" y3ny a2al wa2t el circuit me7tagah 3ashan tetala3 output. Or in another way, a2dar ada5l input gedeed kol 2ad eh? for example, ana da5alt A = 7 w B = 5, me7tag astana wa2t 2ad eh 3ashan ashoof 12 3and el output? or in the other way me7tag aseeb el 7 wel 5 dool 3al inputs 2ad eh abl ma aghayarhom? a7san 7aga momken te3melha enak teftered en kol el inputs wel outputs registered, w tshoof a2al clock period te2dar te operate beha. That is (we symbolize a flip flop by ×):

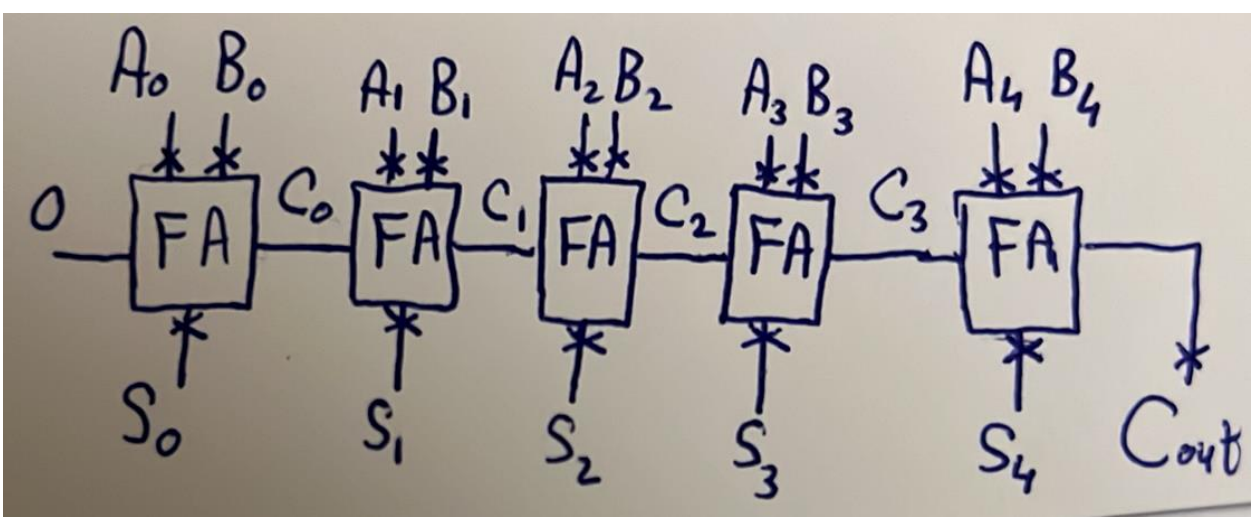

Tyb hane3raf a2al clock period ezay? 3an taree2 enena nedawar 3al critical path. Fa nebda2 nebos 3ala kol el paths el men flip flop le flip flop w nshoof men aktar wa7ed leeh delay. From the previous figure:

Output	S_0	S_1	S_2	S_3	S_4	C_{out}
Delay	$t_p\|_S$	$t_p\|_s + t_p\|_{C_{out}}$	$t_p\|_s + 2\ t_p\|_{C_{out}}$	$t_p\|_s + 3\ t_p\|_{C_{out}}$	$t_p\|_s + 4\ t_p\|_{C_{out}}$	$5\ t_p\|_{C_{out}}$

Which output has the largest delay?

Answer:

S_4 has the largest delay.

Thus, the critical path here is from the registers at the inputs A_0 & B_0 until the register at the output S_4 and the critical path delay is $t_p|_s + 4\ t_p|_{C_{out}}$. Thus:

$$T_{min} = t_{cq} + \left(t_p|_s + 4\ t_p|_{C_{out}}\right) + t_{su}$$

$$f_{max} = \frac{1}{T_{min}} = \frac{1}{t_{cq} + \left(t_p|_s + 4\ t_p|_{C_{out}}\right) + t_{su}}$$

Thus, the latency (i.e. the delay taken to finish a task) and throughput (i.e. number of tasks finished per unit time):

$$latency = 2\ clock\ cycles = 2 * \left[t_{cq} + \left(t_p|_s + 4\ t_p|_{C_{out}}\right) + t_{su}\right]\ seconds$$

$$throughput = 1\ output\ every\ clock\ cycle = \frac{1}{t_{cq} + \left(t_p|_s + 4\ t_p|_{C_{out}}\right) + t_{su}}\ outputs/second = f_{max}$$

Watch video 1.

What if we want to increase the throughput?

Answer:

By pipelining! Place flip flops between each two flip flops. That is:

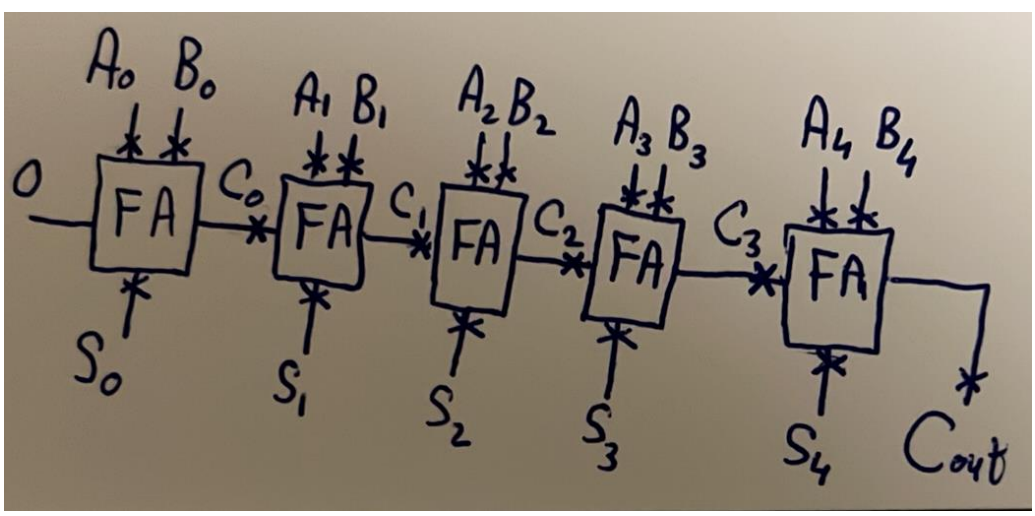

However, keda el denya mesh hateshtaghal sa7. Leeh? Watch video 2.

Registering inputs:

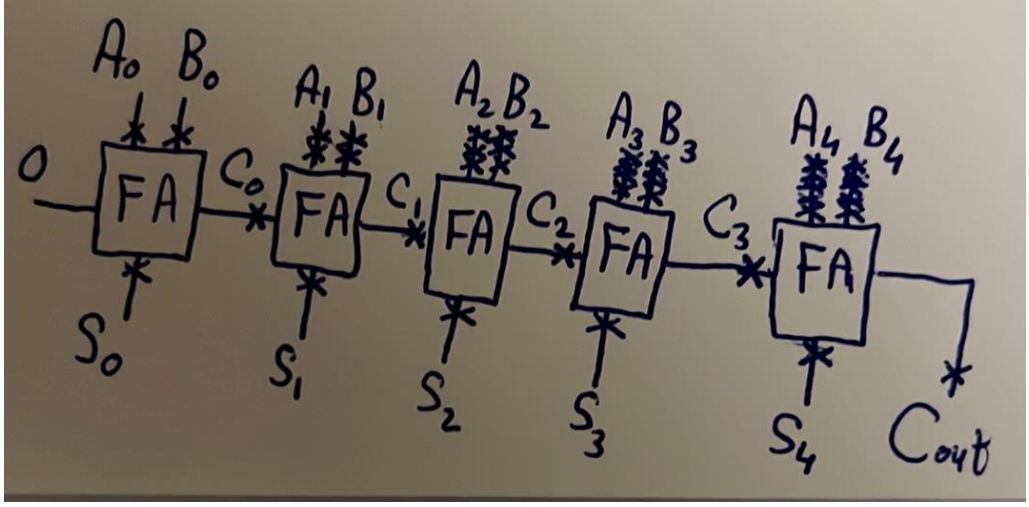

Registering outputs:

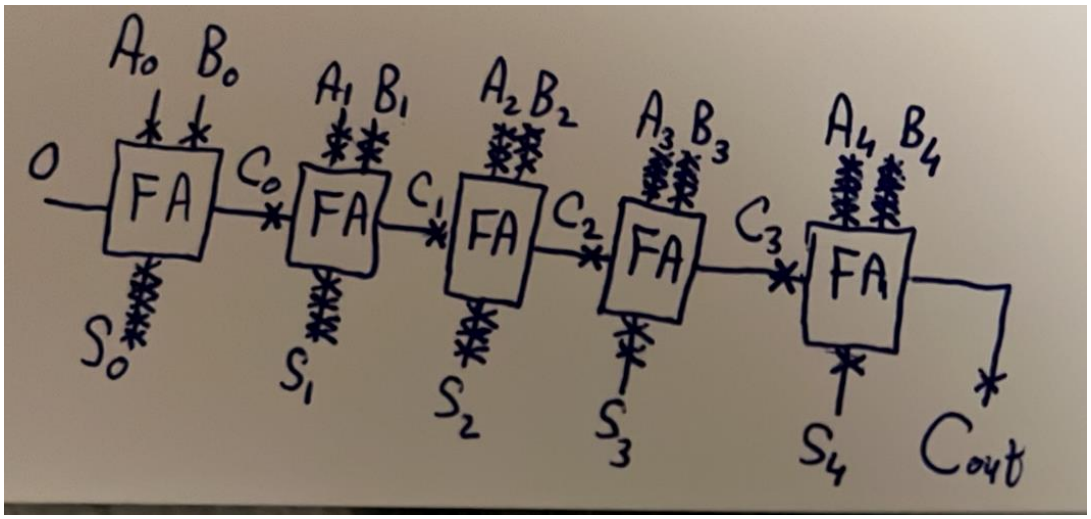

So now, and after using pipelining, what is the critical path here?

Answer:

El paths el ba2et mawgoda delwa2ty heya shift register (at the inputs and outputs registers), from input to sum (i.e. $t_p|_s$), or from input to carry (i.e. $t_p|_{C_{out}}$). Fa tab3an akeed el input to sum path da howa el critical path. Thus, the critical path delay became $t_p|_s$ instead of $t_p|_s + 4\ t_p|_{C_{out}}$. Thus:

$$T_{min} = t_{cq} + t_p|_s + t_{su}$$

And, the latency and throughput became:

$$latency = 6\ clock\ cycles = 6 * [t_{cq} + t_p|_s + t_{su}]$$

$$throughput \approx 1\ output\ every\ clock\ cycle\ (if\ we\ ignored\ the\ first\ 6\ wasted\ clock\ cycles)$$
$$= \frac{1}{t_{cq} + t_p|_s + t_{su}}\ outputs/second = f_{max}$$

So, notice that, using pipelining, the latency has increased, but we managed to increase the throughput through breaking the critical paths by flip flops (which is pipelining), and adding registers at the inputs and outputs to align the data.

This was an example for illustration, but practically we do not pipeline deeply on that level. That is, mesh ben5osh gowa el N-bit adder w ne3mel pipelining gowaha. Instead, momken ne3mel pipelining mabeen sub-blocks masalan.

El so2al hena: eh el 5alla el throughput yezeed bzbt? Y3ny lw ta5od balak enena 7atena flip flops da el mafrood yezawed 3alaya overhead aslan beta3 el setup time beta3 kol flip flop, however el throughput la2enaha zadet. Fa eh el zawed el throughput be eny 7ateet flip flops bzbt?

Answer: enak fel awel lama full adder kanet bet5allas 7esbet-ha kanet betefdal mestaneya ba2y el full adders ye5allaso homa kaman 3ashan tetala3 result. However, el enta 3amalto bel pipelining delwa2ty howa en athna2 ma a5er full adder bete7seb 7esba beta3t input mo3ayan, el full adder el ableha bete7seb 7esba le input tany, wel full adder el ableha le input tany, and so on. Fanta hena 3amalt pipelining fel time, fi nafs el wa2t el full adder shaghala 3la 7esbet input mo3ayan, el full adder el gambaha shaghala 3ala 7esba tanya. Howa da ta7dedan el zawed el throughput. At the expense of eh? at the expense of larger area due to the additional pipelining registers AS WELL AS an increase in the latency in number of clock cycles, and a slight increase (if you considered t_{cq} and t_{su} of the added pipelining registers) or no increase (if you ignored them) in the latency as absolute time.

VIP summary: ***pipelining is used to improve throughput through trying as much as possible not to allow Processing Units (PUs) to be idle by adding pipelining registers between PUs. This results in an increase in the operating clock frequency, an increase in latency when counted in number of cycles, and latency in absolute time units might not change because the clock period drops relative to the unpipelined case. Never say pipelining is used to increase clock frequency, it is used to increase throughput in the first place and clock frequency increases by the way.***

For an extra example (for illustration), watch this from 1:18:25 to the end.